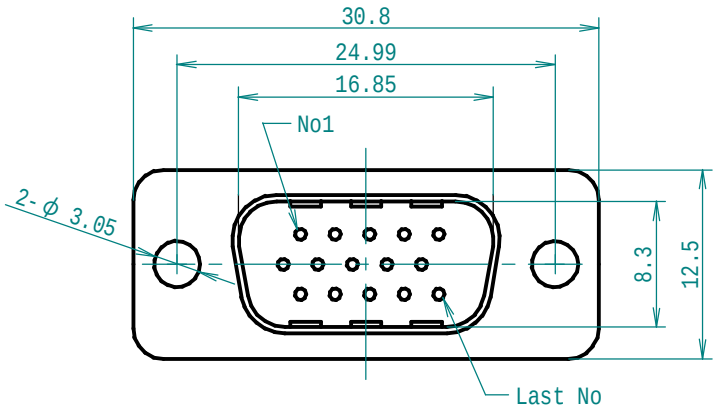

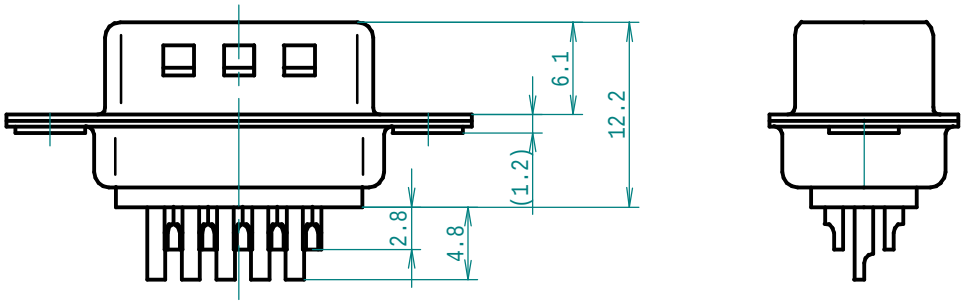

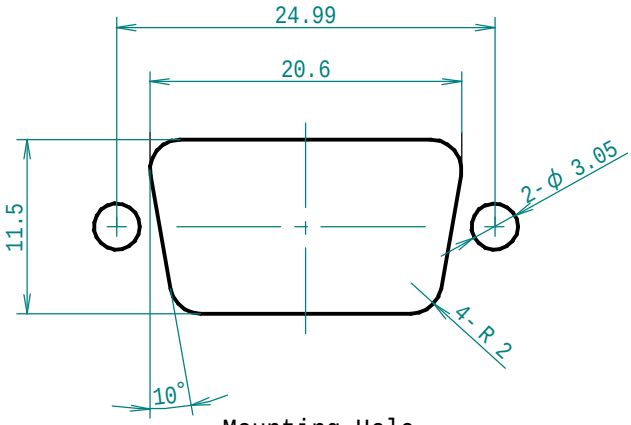

Mounting Hole

D-Sub １５Ｐ Connector(M)

ＤＨＷ１０－１５１Ｆ２００

Dimensions

TECHNICAL ELECTRON CO.,LTD.